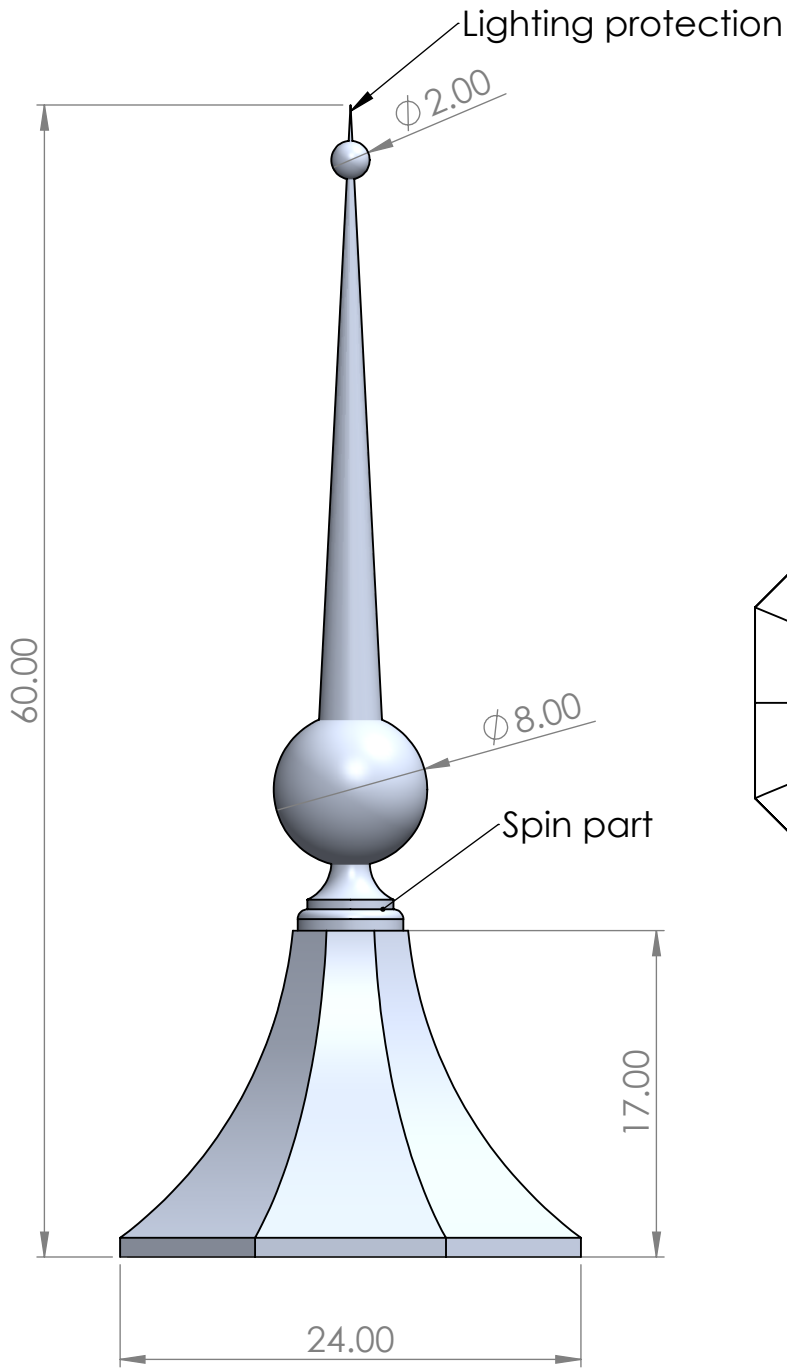

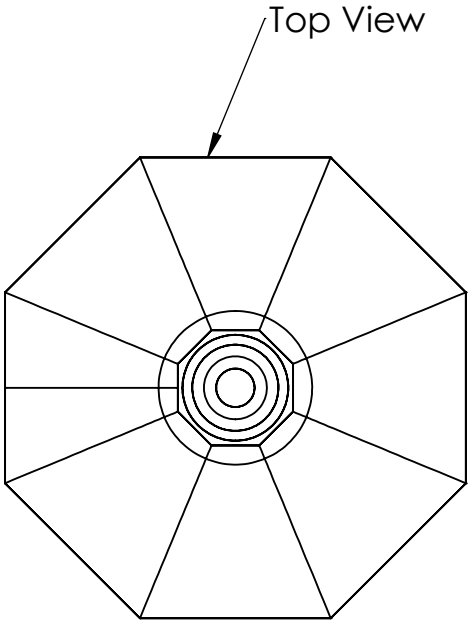

Roof Shapes:								Base Shape		
Flat Roof	Gable	4 hip pyramid	Hip End &Ridge	Cone Turret	4 hip &Ridge	Hexagon Turret	Octagon Turret	4 SideBox Straight cone Swipe cone	Round base Round Cone	Hexagon/Octagon Straight cone Swipe cone

Roof Shape :	**Material:**
Roof Pitch: /12"	**Lighting protection:**
Custom size:	**Base Shape:**
Signature:	

PJ Metal Craft LLC.
Pjmetalcraft.com
Pjmetalcraft@gmail.com
1-855-912-5557

PROPRIETARY AND CONFIDENTIAL

THE INFORMATION CONTAINED IN THIS DRAWING IS THE SOLE PROPERTY OF ***PJ Metal Craft LLC.*** ANY REPRODUCTION IN PART OR AS A WHOLE WITHOUT THE WRITTEN PERMISSION OF ***PJ Metal Craft LLC.*** IS PROHIBITED.

SIZE		REV.
A	Alfredo	
SCALE:1:10	WEIGHT:	SHEET 1 OF 1